EXP NO: 1 VERIFICATION OF KIRCHHOFF'S LAW

AIM:-

To verify Kirchhoff's voltage law and Kirchoff's current law both theoritically and practically for a given DC circuit.

APPARATUS REQUIRED:-

SL.NO	APPARATUS	SPECIFICATION	QUANTITY
1	Regulated Power supply	(0-30V)	1
2	Voltmeter	(0-30V) MC	3
3	Ammeter	(0-20mA) MC	3
4	Resistors	1 KΩ	3
5	Bread board	—	1

KVL

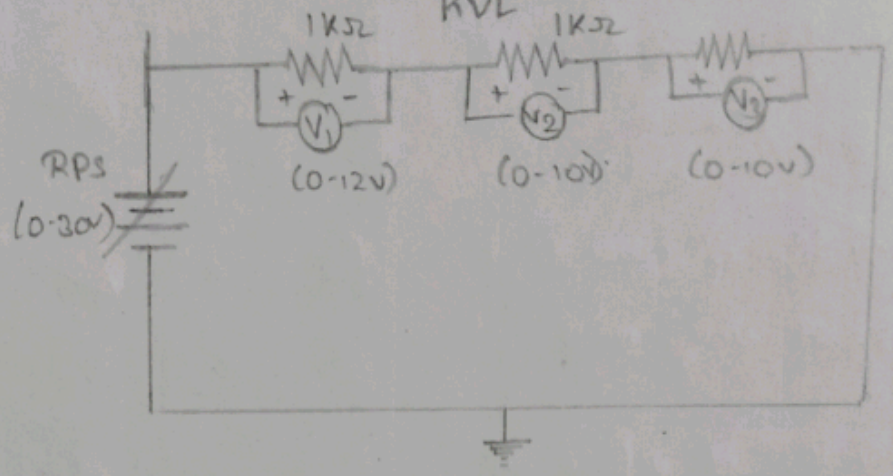
1KΩ
1KΩ
+
-
V1
V2
V3
(0-12V)
(0-10V)
(0-10V)
RPS
(0-30V)

KCL

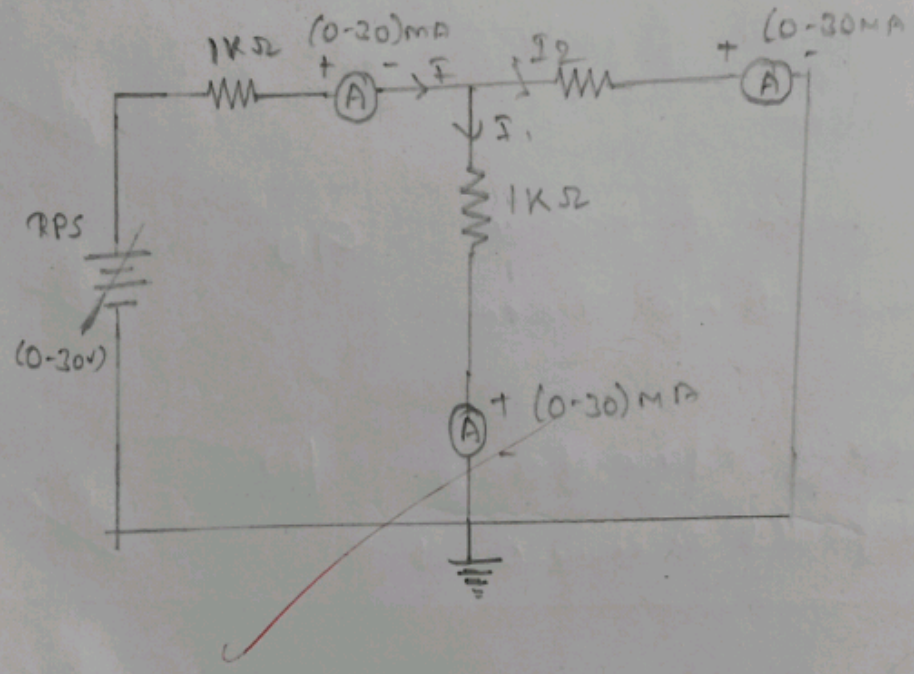
1KΩ
(0-20)mA
+
-
A
I
I2
+
(0-30MA
-
A
I1
1KΩ
RPS
(0-30V)
A
+ (0-30) mA

TABULAR COLUMN:

V (volts)	V_1	V_2	V_3	$V = V_1 + V_2 + V_3$	I (amps)	I_1	I_2	$I = I_1 + I_2$ (amps)
2	1.08	1.02	1	3.1	2.03	1.02	1.03	2.05
6	2.18	2.03	2	6.1	4.02	2.01	2.02	4.03
9	3.15	3	2.96	9.1	6.03	3.01	3.02	6.03

CALCULATION:

Theoritical verification:

For $V = 3V$

$R_{eq} = 1 + 1 + 1 = 3K\Omega$

By ohm's law $V = IR$

$I = V/R = 3/3 \times 10^3 = 10^{-3} A = 1mA$

$V_1 = R_1 I = 10^3 \times 10^{-3} = 1V$

$V_2 = R_2 I = 1V$

$V_3 = R_3 I = 1V$

$V = V_1 + V_2 + V_3 = 3V$

For 6V,

$I = 6/3 \times 10^3 = 2mA.$

$V_1 = R_1 I = 2V$

$V_2 = R_2 I = 2V$

$V_3 = R_3 I = 2V$

$V = 6V.$

PROCEDURE:

1. Give connections as per the circuit diagram.

2. Switch ON the supply, vary the RPS (Regulated power supply) and set a particular input voltage.

3. Note down the readings of ammeter and voltmeters and tabulate them.

4. Vary the RPS for different Input voltage and note down the readings of all the meters.

5. Reduce the RPS to its minimum value and switch OFF the supply

6. Using the tabulated values, verify Kirchoff's Law practically, and verify it theoritically.

For 9V = V

$I = 3mA$

$V_1 = R_1 I = 3V$

$V_2 = R_2 I = 3V$

$V_3 = R_3 I = 3V$

$V = 9V$

KCL:

$\frac{1}{R_{eq}} = 1+1 = 2$; $R_{eq} = 1/2$

$\frac{1}{R_{eq}} = 2$; $R_{eq} = 1 + \frac{1}{2} = 1 + 0.5 = 1.5 k\Omega$

For V = 3V

$I = V/R = 3/1.5 = 2mA$

$I_1 = I \cdot 1/2 = 1/2 \times 2 \times 10^{-3} A = 1mA$

$I_2 = I \cdot 1/2 = 1/2 \times 2 \times 10^{-3} A = 1mA$

For 6V = V

$I = V/R = 6/1.5 = 4mA$

$I_1 = I \cdot 1/2 = 1/2 \times 4 \times 10^{-3} A = 2mA.$

$I_2 = I \cdot 1/2 = 1/2 \times 4 \times 10^{-3} A = 2mA.$

For V = 9V, $I = V/R = 9/1.5 = 6mA$

$I_1 = I \cdot 1/2 = 1/2 \times 6 \times 10^{-3} = 3mA.$

$I_2 = I \cdot 1/2 = 1/2 \times 6 \times 10^{-3} = 3mA.$

MARKS SPLIT UP :

SL.NO	DESCRIPTION	MARKS ALLOTED	MARKS OBTAINED
1.	Experimental setup/ connections	20	20
2.	observations / Readings	20	20
3.	Calculations / Results	20	16
4.	Viva	20	20
5.	Record	20	10

80

RESULT :-

Thus, Kirchoff's current law and Kirchoff's voltage law are verified practically and theoritically.